Vorpa **TC**

Nylon clip with plug and screw

concrete | natural stone | solid brick | perforated brick | perforated cement

products group

TC1
single nylon clip

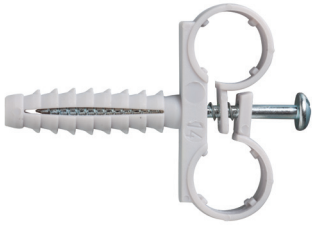

TC2
double nylon clip

Suitable for
- concrete
- natural stone
- solid brick
- perforated brick
- perforated cement

To fix
- metric insulation pipes
- cable

product information

Characteristics
- nylon clip with plug and screw
- double version available
- installation temperature: +5°C / +40°C
- working temperature: -40°C / +40°C (max +80°C fot short period)

Suggestion for use
- The use of plastic anchors is not recommended for permanent suspended loading applications above 40°C

installation sequence

Clean the hole before the installation

Single clip TC 1

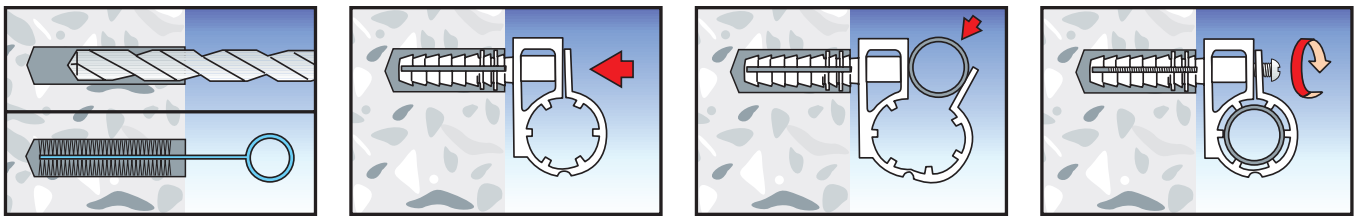

Double clip TC 2

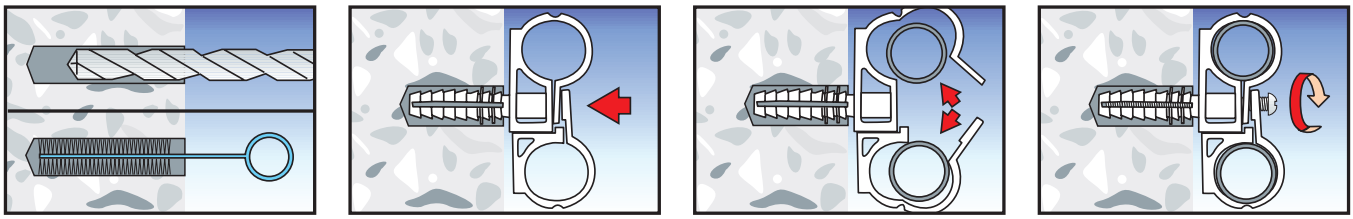

Examples of applications

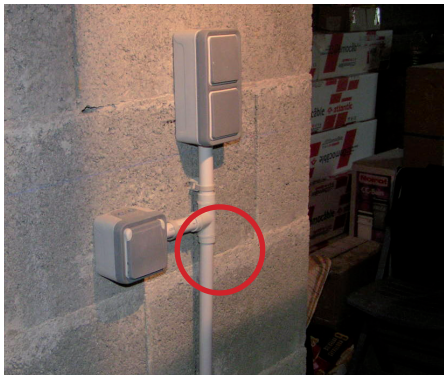

Vorpa **TC**

Nylon clip with plug and screw

concrete | natural stone | solid brick | perforated brick | perforated cement

product code and technical data

TC1
single nylon clip

Code	Description	d_v xL_v mm	d_o mm	h_{min} mm	h_1 mm	h_{ef} mm	Ø mm
1090	TC1 10	3,5x35	5	30	30	20	10
1091	TC1 12	3,5x35	5	30	30	20	12
1092	TC1 14	4x45	6	50	35	25	14
2868	TC1 15	4x45	6	50	35	25	15
1093	TC1 16	4x45	6	50	35	25	16
1094	TC1 18	4,5x50	8	60	45	30	18
1095	TC1 20	4,5x50	8	60	45	30	20
1096	TC1 22	4,5x50	8	60	45	30	22
1097	TC1 24	6x60	10	80	50	40	24
1098	TC1 26	6x60	10	80	50	40	26
1100	TC1 28	6x60	10	80	50	40	28

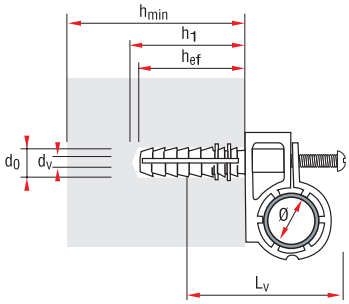

d_o = Hole diameter
h_1 = Min. hole depth
L_t = Plug length
L_v = Screw length
Ø = Pipes
h_{ef} = Effective embedment depth
d_v = Screw diameter
h_{min} = Minimum thickness of the fixture

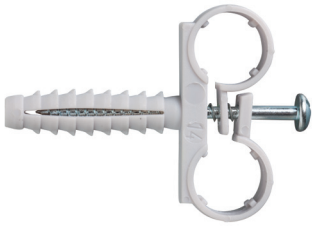

TC2
double nylon clip

Code	Description	d_v xL_v mm	d_o mm	h_{min} mm	h_1 mm	h_{ef} mm	Ø mm
2090	TC2 10	4,5x50	8	60	60	30	10
2091	TC2 12	4,5x50	8	60	60	30	12
2092	TC2 14	4,5x50	8	60	60	30	14
2867	TC2 15	4,5x50	8	60	60	30	15
2093	TC2 16	4,5x50	8	60	60	30	16
2094	TC2 18	6x60	10	80	70	40	18
2095	TC2 20	6x60	10	80	70	40	20
2096	TC2 22	6x60	10	80	70	40	22
2100	TC2 28	6x60	10	80	70	40	28

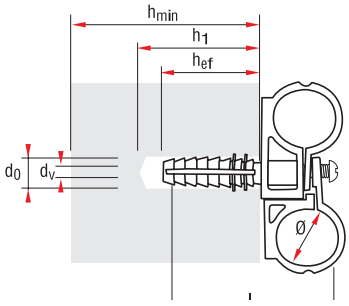

ATTENTION: An appropriate safety factor ≥ 6 should be applied on these values

TC1 - TC2

Substrate materials	TC1 10÷12	TC1 14÷16	TC1 18÷22	TC1 24÷28	TC2 10÷16	TC2 18÷28
Pull out values in daN						1 daN≃1 kg
Perforated brick	30	48	72	96	72	96
Double brick UNI	42	78	84	120	84	120
Concrete C20/25	54	90	96	180	96	180

Revision 07-2020